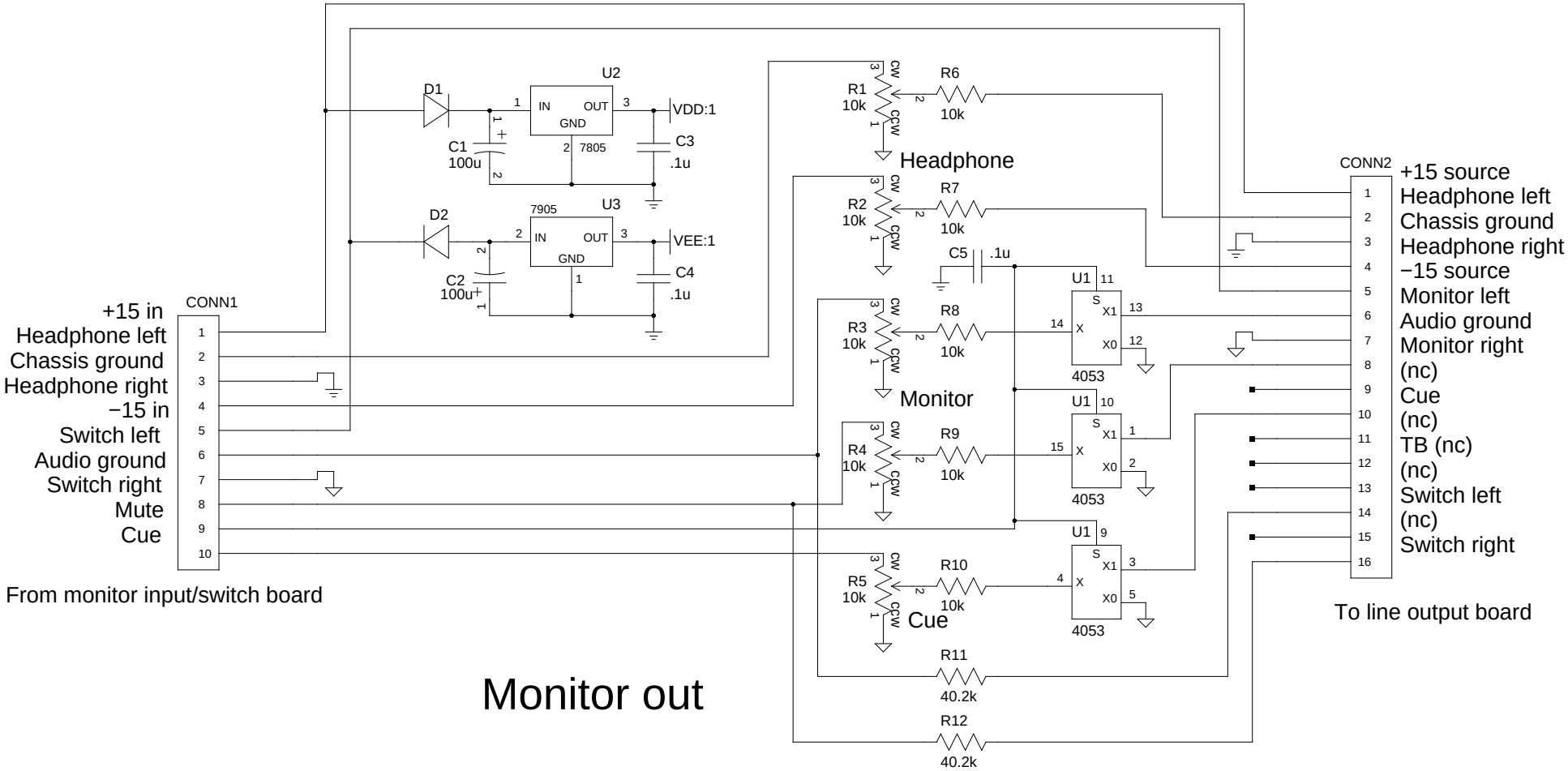
CONN1
+15 in
Headphone left
Chassis ground
Headphone right
−15 in
Switch left
Audio ground
Switch right
Mute
Cue
From monitor input/switch board
D1
D2
U2
U3
7805
7905
IN
OUT
GND
C1
100u
C2
100u
C3
.1u
C4
.1u
VDD:1
VEE:1
R1
10k
R2
10k
R3
10k
R4
10k
R5
10k
R6
10k
R7
10k
R8
10k
R9
10k
R10
10k
R11
40.2k
R12
40.2k
C5
.1u
Headphone
Monitor
Cue
U1
4053
CW
CCW
CONN2
+15 source
Headphone left
Chassis ground
Headphone right
−15 source
Monitor left
Audio ground
Monitor right
(nc)
Cue
(nc)
TB (nc)
(nc)
Switch left
(nc)
Switch right
To line output board
Monitor out