What is Vout? Name _____

(1)

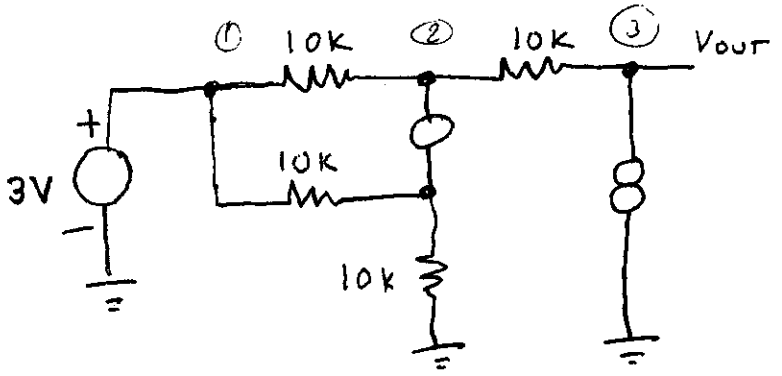

0

	1	wrong
−0	6	correct
−1	4	interpret nullator as real short (2V) (−3V)
−2	2	$V_2 = 0$
−3	5	other

(2) A circuit delivers 12 volts into an open circuit,
and .1 Amp into a short circuit.

Give two possible circuits to do this.

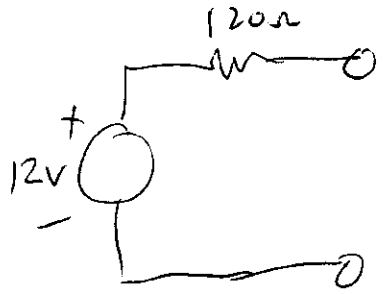

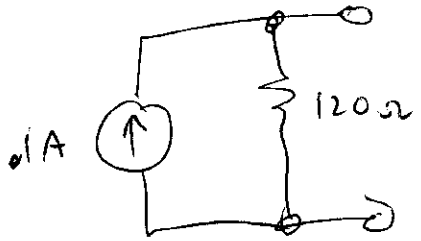

4	correct	−0
5	close	−1
3	clue	−2
5	clueless	−3

③

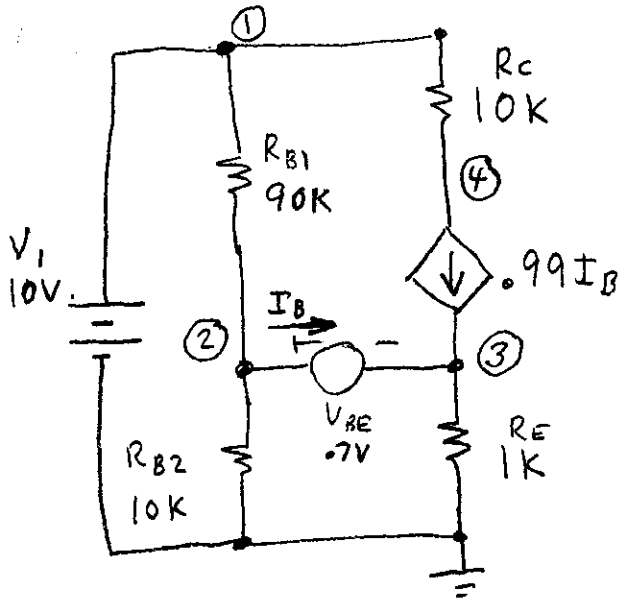

Find the voltage at node 3.

Hint:

Simplify the circuit as much as you can.

(Find the Thevenin equivalent circuit of $V_1, V_{BE}, R_{B1}, R_{B2}$)

Then write the node equation for node 3.

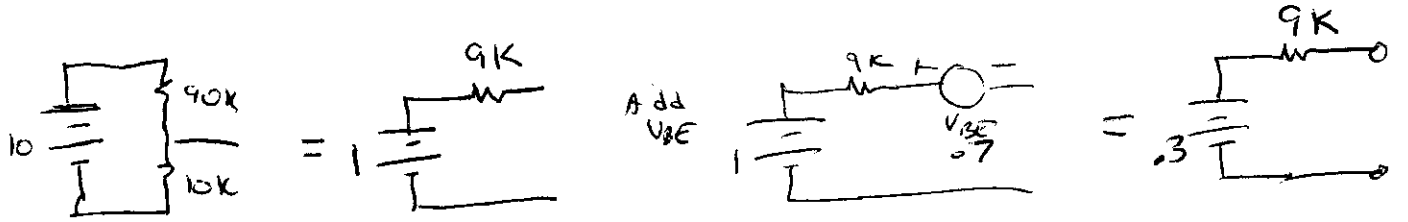

Simplified circuit:

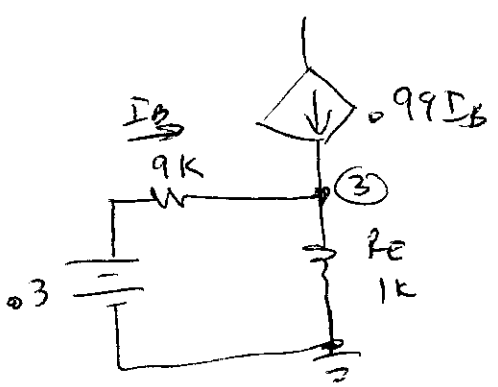

$$I_B = \frac{.3 - V_3}{9k} \qquad -I_B = \frac{V_3 - .3}{9K}$$

$$\frac{V_3 - .3}{9K} + \frac{V_3}{1K} - .99\, I_B = 0$$

$$\frac{V_3 - .3}{9K} + \frac{V_3}{1K} + .99\,\frac{V_3 - .3}{9K} = 0$$

$$1.99\,\frac{V_3 - .3}{9K} + \frac{V_3}{1K} = 0$$

$$1.99\,(V_3 - .3) + 9V_3 = 0$$

$$10.99\,V_3 - .597 = 0$$

$$V_3 = \frac{.597}{10.99} = .054$$

The hard way...

① $V_1 = 10$

④ not necessary (resistor in series with current source.

(2,3) $$\frac{V_2 - V_1}{R_{B1}} + \frac{V_2}{R_{B2}} + \frac{V_3}{R_E} - .99 I_B$$

$$V_2 = V_3 + V_{BE}$$

③ (not as supernode)

$$\frac{V_3}{R_E} - .99 I_B - I_B = 0$$

② (not as supernode)

$$\frac{V_2 - V_1}{R_{B1}} + \frac{V_2}{R_{B2}} + I_B = 0$$

solve ③ for I_B

$$1.99 I_B = \frac{V_3}{R_E}$$

$$I_B = \frac{V_3}{1.99 R_E}$$

Sub I_B in ②

$$\frac{V_2 - V_1}{R_{B1}} + \frac{V_2}{R_{B2}} + \frac{V_3}{1.99 R_E} = 0$$

$$\frac{V_3 + V_{BE} - V_1}{R_{B1}} + \frac{V_3 + V_{BE}}{R_{B2}} + \frac{V_3}{1.99 R_E} = 0$$

$$\frac{V_3 + .7 - 10}{90K} + \frac{V_3 + .7}{10K} + \frac{V_3}{1.99K} = 0$$

$$V_3\left(\frac{1}{90K} + \frac{1}{10K} + \frac{1}{1.99K}\right) + \left(\frac{-9.3}{90K} + \frac{.7}{10K}\right) = 0$$

The hard way p.2

$$V_3\left(\frac{1}{1630}\right) - \frac{1}{30K} = 0$$

$$V_3 = \frac{1630}{30\,000} = .054$$

---

2 −0 correct answers

~~3~~ −1 correct node equations

~~0~~ −2 clue at node equations

5 −3 no clue, or I can't follow it.